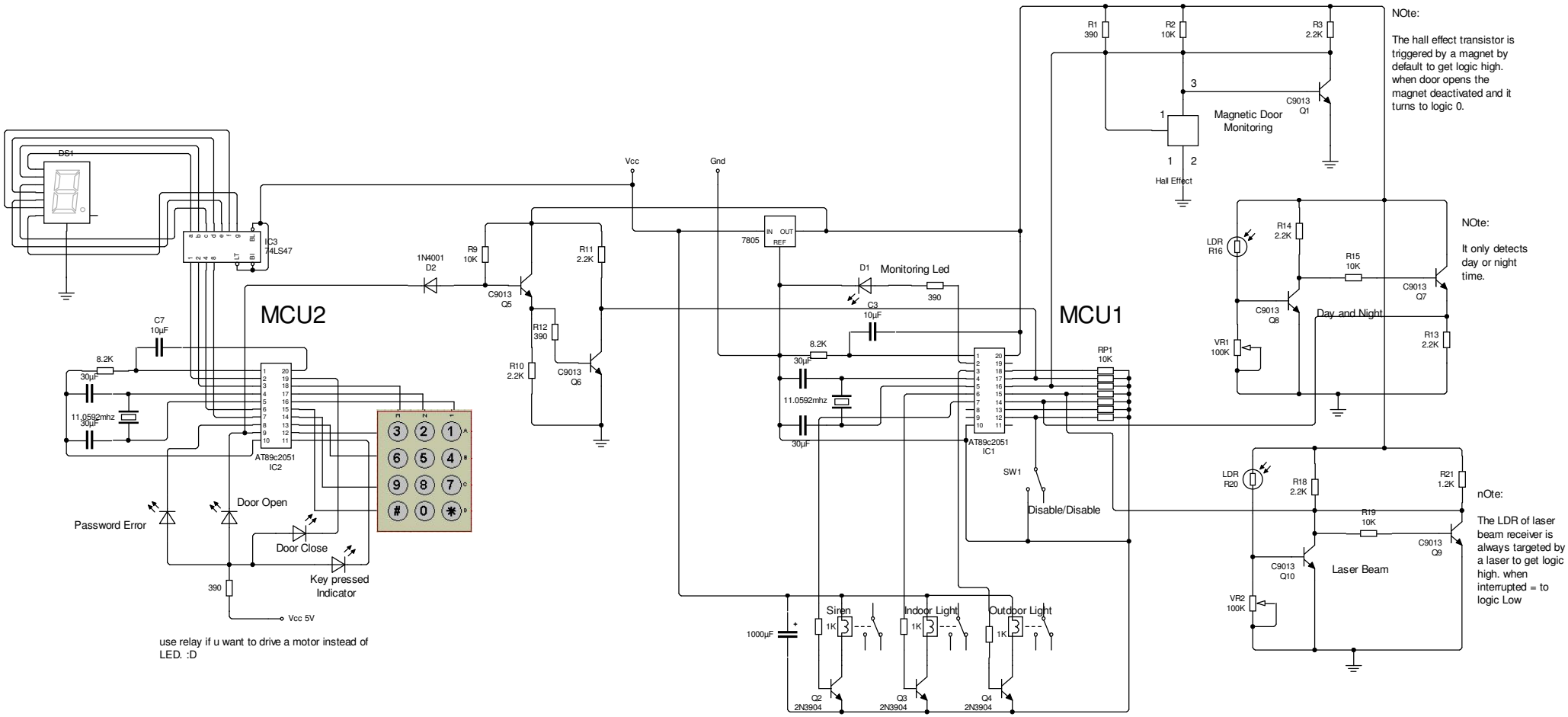
DS1
IC3
74LS47
MCU2
MCU1
Vcc
Gnd
7805
IN
OUT
REF
1N4001
D2
R9
10K
R11
2.2K
C9013
Q5
R12
390
R10
2.2K
C9013
Q6
C7
10µF
8.2K
30µF
11.0592mhz
30µF
AT89c2051
IC2
Password Error
Door Open
Door Close
Key pressed
Indicator
390
Vcc 5V
use relay if u want to drive a motor instead of
LED. :D
D1
Monitoring Led
390
C3
10µF
8.2K
30µF
11.0592mhz
30µF
AT89c2051
IC1
RP1
10K
SW1
Disable/Disable
1000µF
Siren
Indoor Light
Outdoor Light
1K
1K
1K
Q2
2N3904
Q3
2N3904
Q4
2N3904
R1
390
R2
10K
R3
2.2K
C9013
Q1
Magnetic Door
Monitoring
Hall Effect
NOte:
The hall effect transistor is triggered by a magnet by default to get logic high. when door opens the magnet deactivated and it turns to logic 0.
LDR
R16
R14
2.2K
R15
10K
C9013
Q7
C9013
Q8
Day and Night
VR1
100K
R13
2.2K
NOte:
It only detects day or night time.
LDR
R20
R18
2.2K
R21
1.2K
R19
10K
C9013
Q9
C9013
Q10
Laser Beam
VR2
100K
nOte:
The LDR of laser beam receiver is always targeted by a laser to get logic high. when interrupted = to logic Low